Terminating bgp with apipa blocks on firewalls - Avoid at all times -

The problem

[Day 1]

Today i got lost in sophos firewalls internal routing and nat labyrinths, what i was trying to do was a simple LDAP integration to a server ath the end of a vpn tunnel. For interoperability reasons with AWS networks, we did used the famous "APIPA" block ip addresses on our bgp neigborship design.

But, there is catch !

There is always a catch and sometimes *a group of catches*. Windows server machines won't route or process apipa address ranges. Блять right ? Anyway my options were clear

1. Change the addressing on ipsec links
2. Snat the connections getting out of the firewall

Here is the topology i was dealing with.

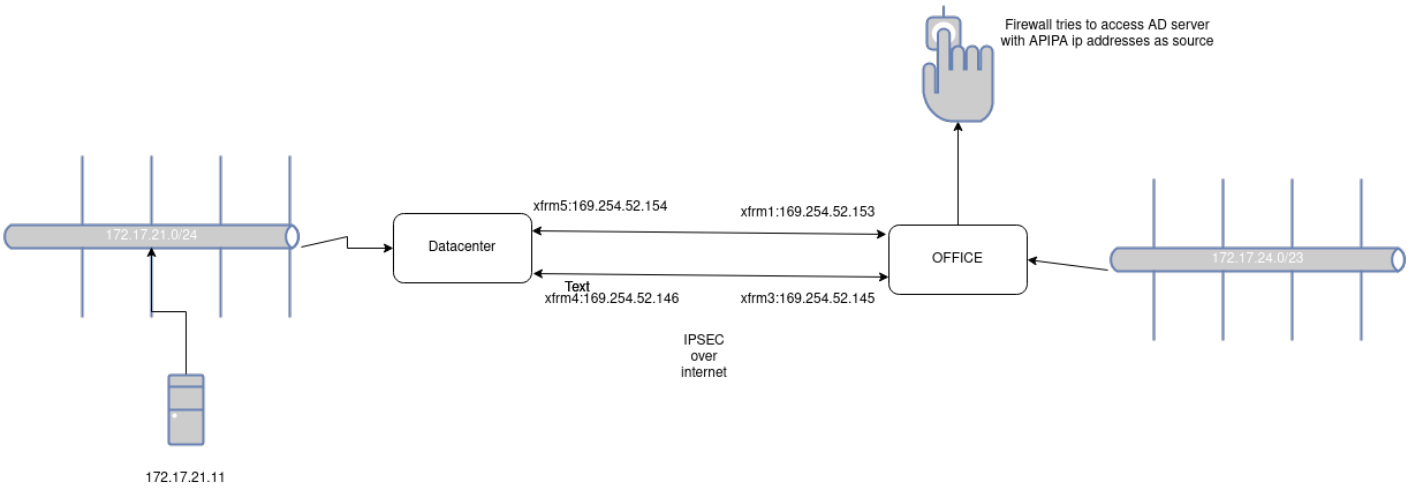

i got close

I thought that amazon must have a sound reason to use these blocks on their integrations. I am sure they never thought the apipa addresses were going to be used as source addresses on production links, or the CPE's might have limitations too.

I know that Fortigates have the option to specify source addresses for control plane operations however sophos doesn't have them. _insert sad emoji here _

there is one

Ok, i can always use the snat option right ? So i went with option 2 on my list.

And after two hours mangling with it i gave up and created a case, **which got the required attention immediately** from sophos, since the traffic is generated from firewall itself, a special snat entry was not going to be processed as i expect.

Apparently Postrouting operations weren't processed on **control plane chains**, and i really don't wanted to go with option 2 so a very capable and gentle guy from sophos tried helped me however we couldn't got the golden ticket today !

I did spent 3 hours working on this case learned many things about how kernel processes encrypted packets and found out good documents about how packets traverse when they are using xfrm framework. i am going to add the things i read at #further reading section below.

And will update this page on next update i get.

Further Reading

Beautiful explanation of xfrm

How to use snat with xfrm if had a vyos

This image from the post above displays the packet flow mech on linux.



Strongswan xfrm implementation

The solution

[day 5]

Apparently, there is a special section to add nat entries for "System Generated Traffic", and it is only accessible to command line interface. To do that you have to access the firewall through

console using ssh and go to advanced menu as shown below.

Then you will have to type

```
cish
```

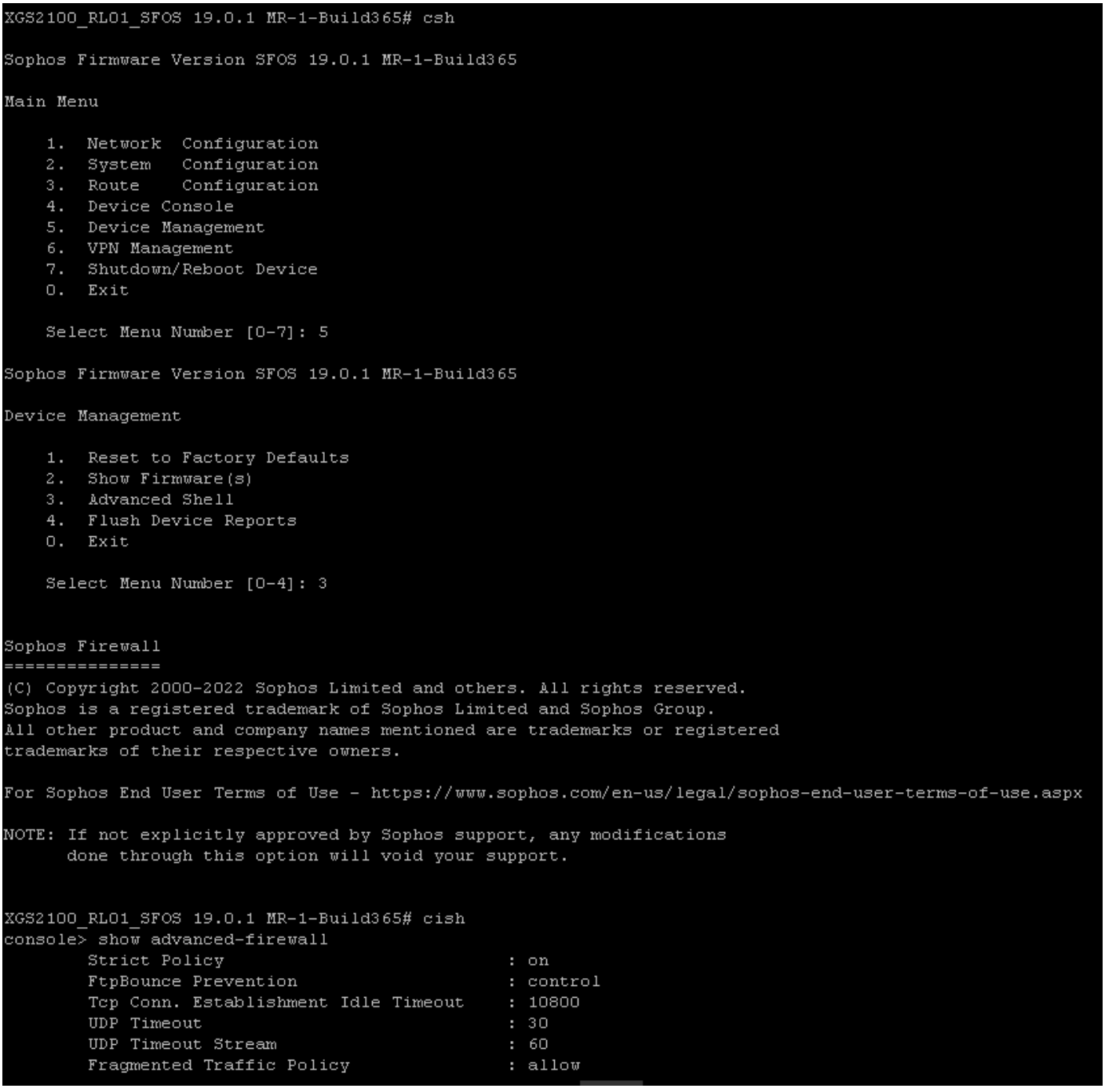

then you'll have to add a nat entry as shown below

```
set advanced-firewall sys-traffic-nat add destination 172.17.21.11 netmask 255.255.255.255
snatip 172.17.24.1
```

[

```
console> set advanced-firewall sys-traffic-nat add destination 172.17.21.11 netmask 255.255.255.255 snatip 172.17.24.1
console> show advanced-firewall
        Strict Policy                          : on
        FtpBounce Prevention                   : control
        Tcp Conn. Establishment Idle Timeout   : 10800
        UDP Timeout                            : 30
        UDP Timeout Stream                     : 60
        Fragmented Traffic Policy              : allow
        Midstream Connection Pickup            : off
        TCP Seq Checking                       : on
        TCP Window Scaling                     : on
        TCP Appropriate Byte Count             : off
        TCP Selective Acknowledgements         : on
        TCP Forward RTO-Recovery[F-RTO]        : off
        TCP TIMESTAMPS                         : off
        Strict ICMP Tracking                   : off
        ICMP Error Message                     : allow
        Caching for route lookups              : on
        IPv6 Unknown Extension Header          : deny


        Bypass Stateful Firewall
        ------------------------
         Source              Genmask            Destination         Genmask


        NAT policy for system originated traffic
        ----------------------
        Destination Network     Destination Netmask     Interface       SNAT IP
        172.17.21.11            255.255.255.255                         172.17.24.1

console> ping 172.17.21.11172
ping: bad address '172.17.21.11172'
console> ^C
console> ping 172.17.21.11
PING 172.17.21.11 (172.17.21.11): 56 data bytes
64 bytes from 172.17.21.11: seq=0 ttl=127 time=6.115 ms
64 bytes from 172.17.21.11: seq=1 ttl=127 time=5.872 ms
64 bytes from 172.17.21.11: seq=2 ttl=127 time=5.662 ms
64 bytes from 172.17.21.11: seq=3 ttl=127 time=6.849 ms
64 bytes from 172.17.21.11: seq=4 ttl=127 time=6.032 ms
```

](https://books.netdev.com.tr/uploads/images/gallery/2022-12/image-1672316296662.png)

After you ping the destination or check the firewall you will see that the traffic is natted.

Revision #15
Created 2022-12-19 11:17:10 UTC by Mesut Bayrak
Updated 2023-10-21 11:40:14 UTC by Mesut Bayrak